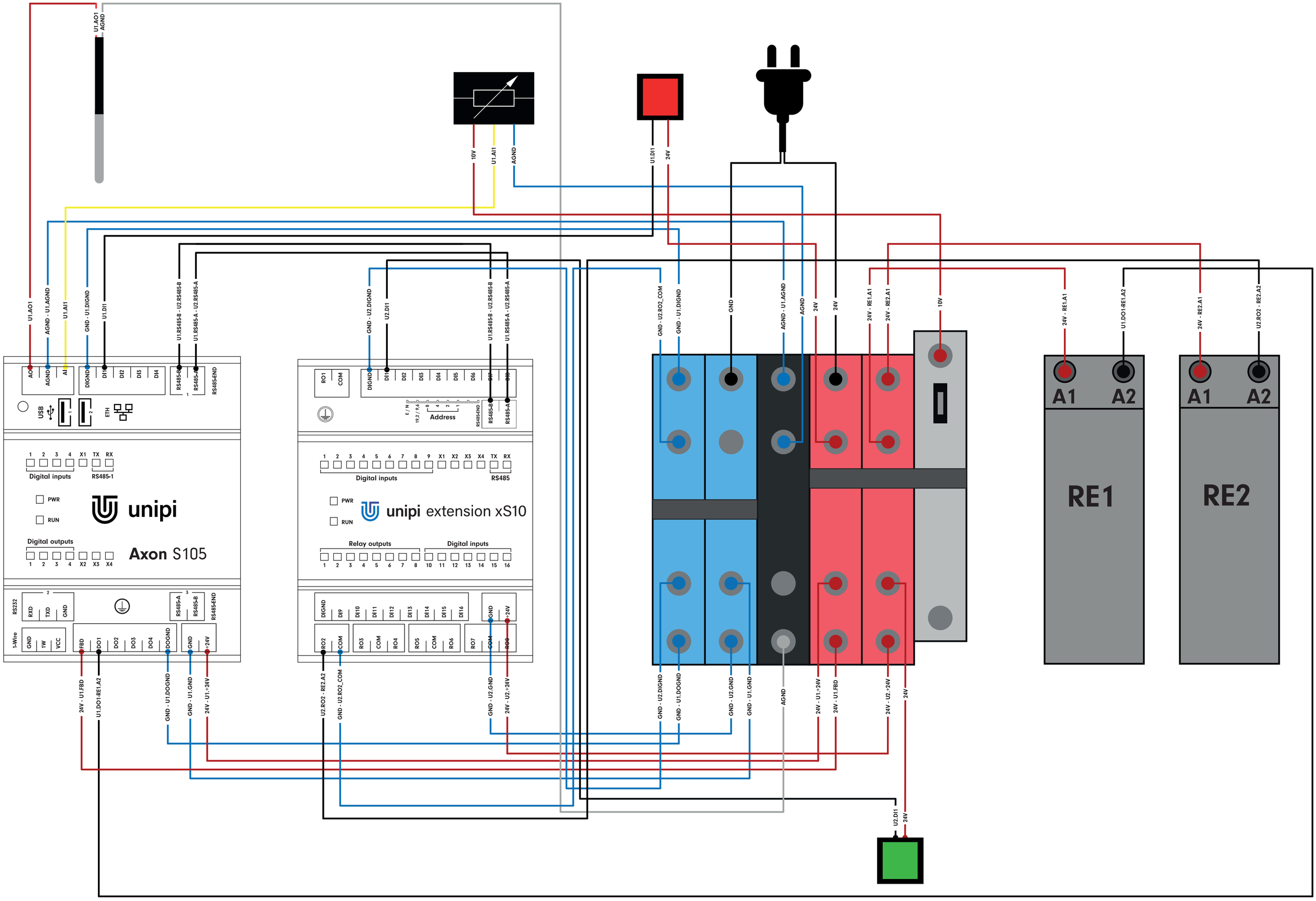
U1.AO1
AGND
10V
U1.AI1
AGND
U1.DI1
24V
U1.AO1
AGND - U1.AGND
U1.AI1
GND - U1.DIGND
U1.DI1
U1.RS485-B - U2.RS485-B
U1.RS485-A - U2.RS485-A
GND - U2.DIGND
U2.DI1
U1.RS485-B - U2.RS485-B
U1.RS485-A - U2.RS485-A
GND - U2.RO2_COM
GND - U1.DIGND
GND
AGND - U1.AGND
AGND
24V
24V
24V - RE1.A1
24V - RE2.A1
10V
24V - RE1.A1
U1.DO1-RE1.A2
24V - RE2.A1
U2.RO2 - RE2.A2
AO
AGND
AI
DIGND
DI1
DI2
DI3
DI4
RS485-B
RS485-A
RS485-END
USB
ETH
Digital inputs
RS485-1
PWR
RUN
unipi
Digital outputs
Axon S105
RS232
RXD
TXD
GND
1-Wire
GND
1W
VCC
FBD
DO1
DO2
DO3
DO4
DOGND
GND
+24V
RS485-A
RS485-B
RS485-END
RO1
COM
DIGND
DI11
DI12
DI13
DI14
DI15
DI16
Address
RS485-END
RS485-B
RS485-A
Digital inputs
RS485
PWR
RUN
unipi extension xS10
Relay outputs
Digital inputs
DIGND
DI9
DI10
DI11
DI12
DI13
DI14
DI15
DI16
GND
+24V
RO2
COM
RO3
COM
RO4
RO5
COM
RO6
RO7
COM
RO8
A1
A2
A1
A2
RE1
RE2
24V - U1.FBD
U1.DO1-RE1.A2
GND - U1.DOGND
GND - U1.GND
24V - U1.+24V
U2.RO2 - RE2.A2
GND - U2.RO2_COM
GND - U2.GND
24V - U2.+24V
GND - U2.DIGND
GND - U1.DOGND
GND - U2.GND
GND - U1.GND
AGND
24V - U1.+24V
24V - U1.FBD
24V - U2.+24V
24V
U2.DI1
24V